ARMY SOLAR

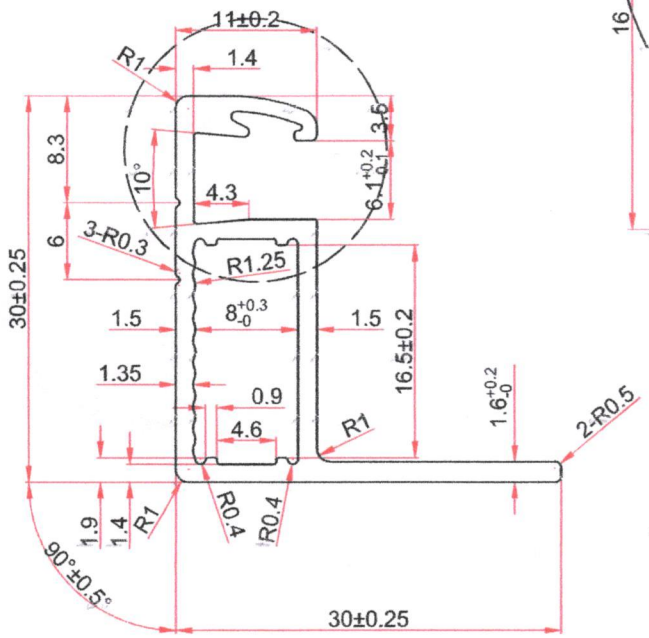


2:1

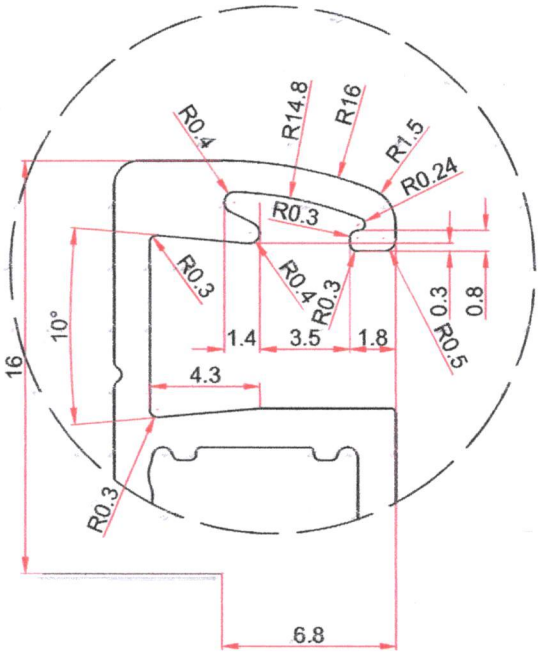


4:1

| UNMARKED TOLERANCE | |
|---|---|
| 1.2 ~ 2 | 0.13 |
| >2.00~3.00 | 0.13 |
| >3.00~6.00 | 0.15 |
| >6.00~10.00 | 0.17 |
| >10.00~15.00 | 0.17 |
| >15.00~20.00 | 0.20 |
| >20.00~30.00 | 0.21 |
| >30.00~40.00 | 0.26 |

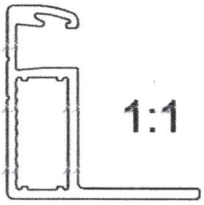

1:1

ARMY SOLAR ENERGY PVT. LTD. ★ SURAT ★

ARMY SOLAR

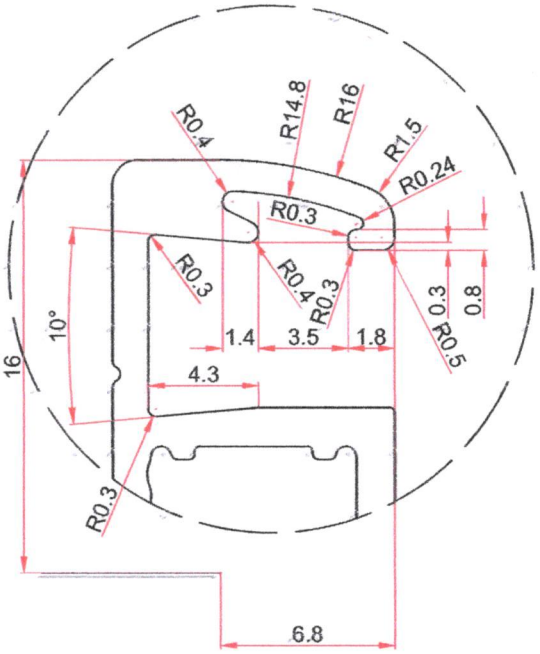


4:1

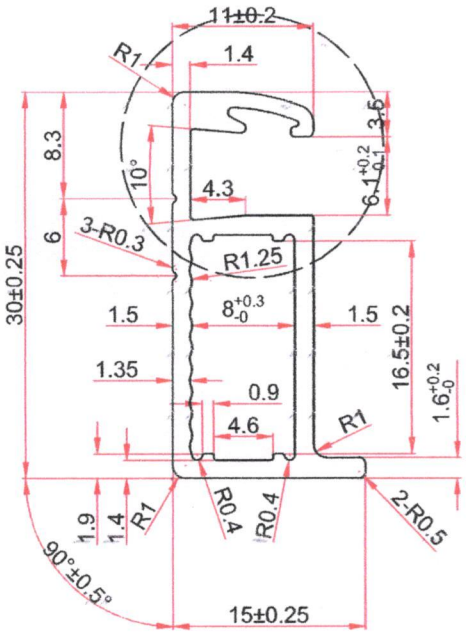


2:1

| UNMARKED TOLERANCE | |
|---|---|
| 1.2 ~ 2 | 0.13 |
| >2.00~3.00 | 0.13 |
| >3.00~6.00 | 0.15 |
| >6.00~10.00 | 0.17 |
| >10.00~15.00 | 0.17 |
| >15.00~20.00 | 0.20 |
| >20.00~30.00 | 0.21 |
| >30.00~40.00 | 0.26 |

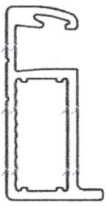

1:1

ARMY SOLAR ENERGY PVT. LTD. SURAT

ARMY SOLAR

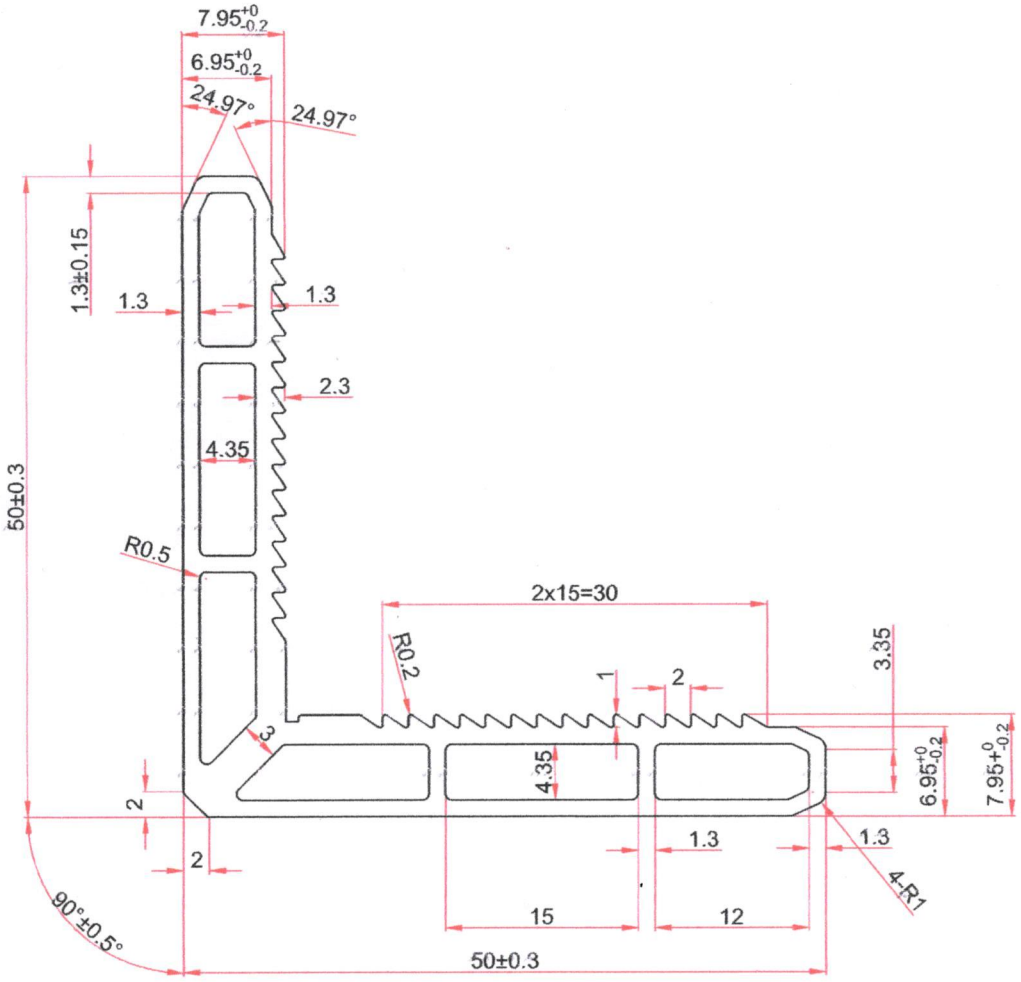


2:1

| UNMARKED TOLERANCE | |
|---|---|
| 1.2 ~ 2 | 0.13 |
| >2.00~3.00 | 0.13 |
| >3.00~6.00 | 0.15 |
| >6.00~10.00 | 0.17 |
| >10.00~15.00 | 0.17 |
| >15.00~20.00 | 0.20 |
| >20.00~30.00 | 0.21 |
| >30.00~40.00 | 0.26 |

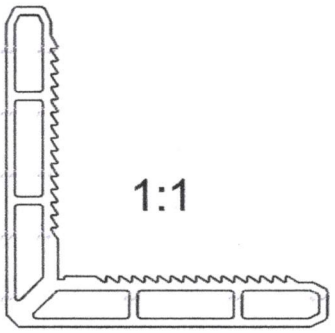

1:1

ARMY SOLAR ENERGY PVT. LTD. ★ SURAT ★

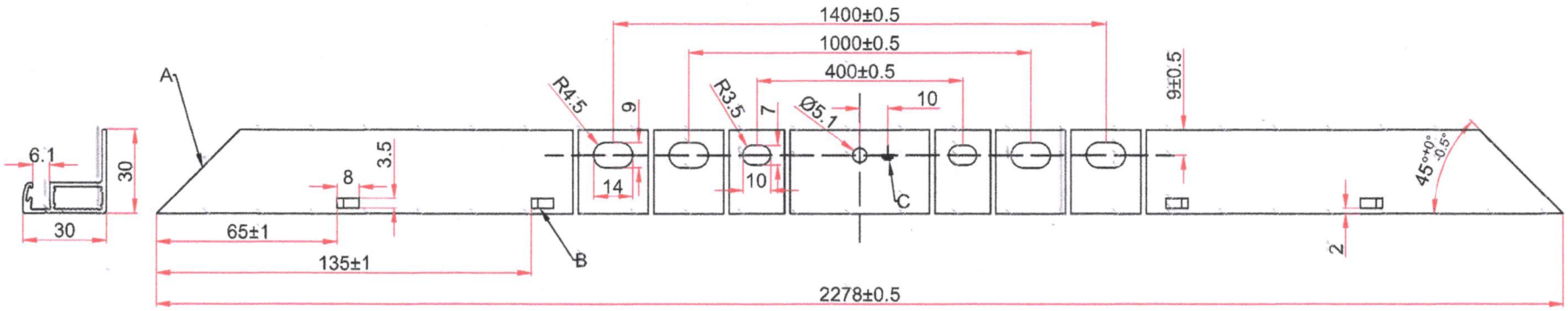


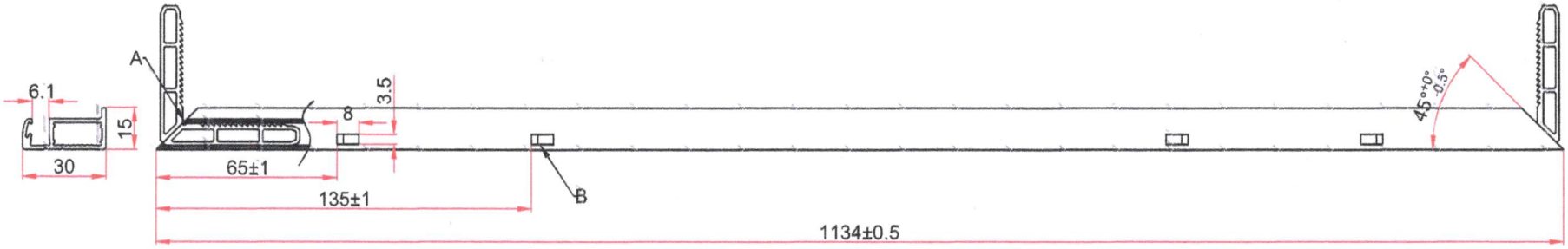


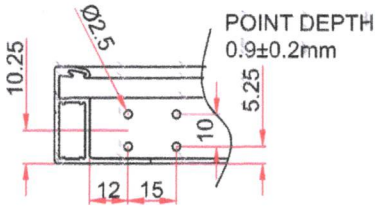


A

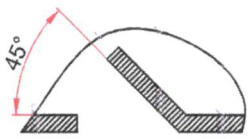


B

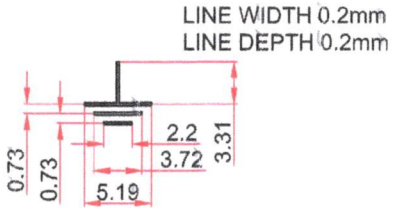


C

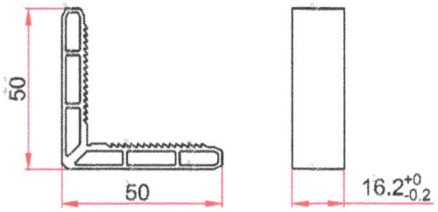


TECHNICAL STANDARD
1.UNMARKED FABRICATION TOLERANCE ±0.5mm;
2.FABRICATION ANGLE TOLERANCE NOT EXCEED 0.5°
3.CURVATURE AND TWISTING ≤1.0mm;
4.DEBURRING AND FLASHING, NO NEED FILM ON SURFACE;

ARMY SOLAR ENERGY PVT. LTD. SURAT

ARMY SOLAR